CATALOG

accessories

FRL Accessories

Pressure Switches, Gauges and Options

EMERSON
Industrial Automation

numatics®

Table of Contents

numatics®

FRL Accessories *Pressure Switches, Gauges & Options* 3-12

PS180 Pressure Switches 3
PS182 Pressure Switches 4
Reclassifiers 5
Electronic Drain Valves 6
Inline Filters - L Series 7
Oxygen Concentrator Regulator 8-9
Gauges 10
Mounting Brackets 11
Mounting Air Systems 12

PS180 Pressure Switches

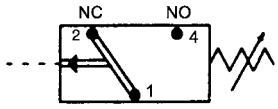

ANSI SYMBOL

Application

Numatics PS180 is a line of pressure switches designed for accurate indication that proper system pressure is being achieved. Available in 1/8 or 1/4 threads, it is easily incorporated into an air system using a **FlexiBlok**® diverter plate of other manifold.

Featuring a rugged housing made from zinc coated steel, the PS180 is designed for industrial multi-million cycle life applications. The four pin connector plug is included and contains a key way preventing accidental misconnection. Pressure adjustment is tamper resistant, hindering unauthorized changes. It can be wired in either normally open or normally closed configurations and includes a case ground pin.

Specifications

Contact Rating: 4A @ 250 V AC
Protection: IP 65, terminals IP00
Maximum Operation: 200/min
Temperature Range: 0° F to 190° F (-15° C to 85° C)
Maximum Pressure: 300 PSI (20 bar)
Maximum Voltage: 250 V AC (200 DC)
Hysteresis Adjustment: 15%
Connector Material: polyamid
Diaphragm Material: Buna N
Housing Material: zinc plated steel

Dimensions in inches (millimeters in parenthesis)

NPTF Thread Dimensions

MODEL	A	B	C
PS180BAN01	2.5 (64)	1.0 (27)	3.1 (79)
PS180CAN01	2.5 (64)	1.0 (27)	3.1 (79)
PS180BAN02	2.5 (64)	1.0 (27)	3.1 (79)
PS180CAN02	2.5 (64)	1.0 (27)	3.1 (79)

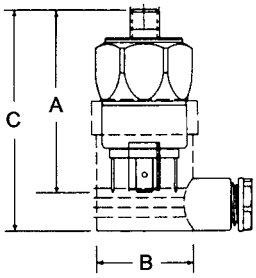

BSPP Thread Dimensions

MODEL	A	B	C
PS180BAG02	2.3 (58)	1.0 (27)	2.9 (74)
PS180CAG02	2.3 (58)	1.0 (27)	2.9 (74)

NPTF Thread Model Selection

NPTF	MODEL	PSIG (BAR)
1/8	PS180BAN01	4-20 (.3-1.5)
1/8	PS180CAN01	14-150 (1-10)
1/4	PS180BAN02	4-20 (.3-1.5)
1/4	PS180CAN02	14-150 (1-10)

BSPP Thread Model Selection

BSPP	MODEL	PSIG (BAR)
1/4	PS180BAG02	4-20 (.3-1.5)
1/4	PS180CAG02	14-150 (1-10)

Use “G” suffix for gold plated terminals (for applications below 50 mA), i.e.PS180BAN02G

PS182 Pressure Switches

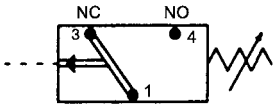

ANSI SYMBOL

Application

Numatics PS182 is the most rugged of the Numatics Pressure Switches. Available in 1/8 or 1/4 NPT and BSPP threads, it is easily incorporated into an air system using a FlexiBlok diverter plate or diverter block.

The unique 12 mm, micro connector makes it simple for electrical connection. The knurled knob with tamper resistant hex screw makes it the easiest pressure adjustment on the market. It can be wired in either a normally open or normally closed configuration.

Specifications

Hysteresis Adjustment	10%
Pressure Ranges:	2-10, 6-30, 20-130
Max Pressure:	600 psi
Set Point Tolerance:	+/- 1 Psi or 5%
*Contact Rating:	4A
Diaphragm Material:	Buna N
Max Operating Cycles:	200/min
Temperature Range:	-40 to 250 F (-40 to 121 C)
Voltage Range:	12 V DC to 250 V AC
Sealing/Protection:	IP 65
Housing Material:	Brass
Electrical Connection:	3-Pin Micro (12 mm)

*Comes standard with gold plated contacts.

Dimensions in inches (millimeters in parenthesis)

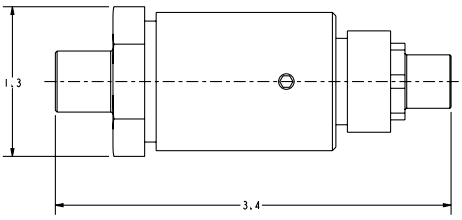

NPTF Thread Model Selection

NPTF	MODEL	PSIG (BAR)
1/8 NPT	PS182AAN01	2-10 (0.14–0.69)
1/8 NPT	PS182BAN01	6-30 (0.40-2.07)
1/8 NPT	PS182CAN01	20-130 (1.38-8.96)
1/4 NPT	PS182AAN02	2-10 (0.14–0.69)
1/4 NPT	PS182BAN02	6-30 (0.40-2.07)
1/4 NPT	PS182CAN02	20-130 (1.38-8.96)

BSPP Thread Model Selection

BSPP	MODEL	PSIG (BAR)
1/8 BSPP	PS182AAG01	2-10 (0.14–0.69)
1/8 BSPP	PS182BAG01	6-30 (0.40-2.07)
1/8 BSPP	PS182CAG01	20-130 (1.38-8.96)
1/4 BSPP	PS182AAG02	2-10 (0.14–0.69)
1/4 BSPP	PS182BAG02	6-30 (0.40-2.07)
1/4 BSPP	PS182CAG02	20-130 (1.38-8.96)

Female Single Ended Cordset

CONNECTOR TYPE	CONNECTOR LENGTH	MODEL NUMBER
90° Elbow	5 Meters	PS182-5-90
Straight	5 Meters	PS182-5-ST

Information subject to change without notice. For ordering information or regarding your local sales office visit www.numatics.com.

Reclassifiers

H40-08 pictured

Application

The Numatics Reclassifier is an exhaust coalescing filter/silencer. Its design removes oil mist and reduces noise from exhaust ports on pneumatic air valves, cylinders, and air control systems at extremely high flow rates

The Numatics Reclassifier can be mounted to exhaust ports on any valve or manifold using a common exhaust base or by combining exhaust ports. Mounting it vertically fully utilizes the oil-catching sump surrounding the filter element and provides easy draining.

Features

- 99% oil removal efficiencies
- 25 dBA noise reduction
- high exhaust flow rates
- low differential back pressures
- top performer in automated paint systems
- 1 micron filtration
- manual or continuous drain option
- metric threads available

Specifications

Maximum temperature: 125° F (52° C) CV rating (30 Series): 6
Maximum pressure: 100 PSIG (7 bar) CV rating (40 Series): 10

Air Flow vs. Back Pressure

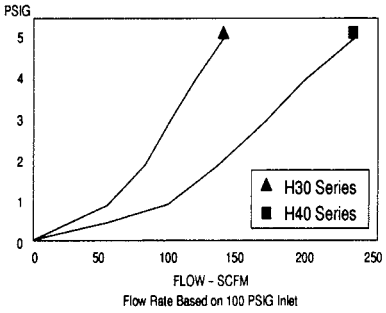

Air Flow vs. Sound Level

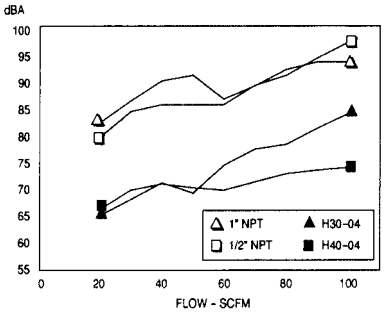

Reclassifiers

➤ Element Replacement Kits

includes filter element only

kit #	description
EKF30H	30 Series, 1 micron coalescer
EKF40H	40 Series, 1 micron coalescer

➤ Bowl Replacement Kits

includes bowl and o-ring

kit #	description
BKF30	30 Series, polycarbonate bowl
BKF30C	30 Series, CircleVision™ bowl
BKF30M	30 Series, metal bowl
BKC40	40 Series, polycarbonate bowl

Dimensions

top dimensions = inches
bottom dimensions (in parenthesis) = millimeters

MODEL	A	B
H30-04	2.5 (64)	7 (178)
H30-06	2.5 (64)	7 (178)
H40-08	3.75 (95)	7.245 (184)
H40-10	3.75 (95)	7.245 (184)

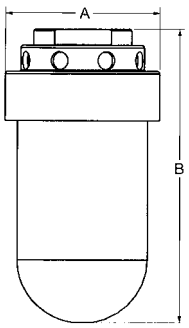

How to Order

H 30 - 04 M

Series
H = Reclassifier

Series
30 = Cv 6.0
40 = Cv 10.0

Threads
- = NPTF
G = G Tap (BSPP)

Port Size
04 = 1/2 (30 Series Only)
06 = 3/4 (30 Series Only)
08 = 1 (40 Series Only)
06 = 1-1/4 (40 Series Only)

Options
C = CircleVision™ Sight Bowl
M = Metal Bowl

Electronic Drain Valves

EDV-04-110AC pictured

Application

Eliminate the manual draining of air lines with the EDV Series Electronic Drain Valve from Numatics. The EDV Series valve is designed to remove condensation from filters, receiver tanks, separators, drip legs, drain traps, and dryers in electronically controlled intervals. The EDV valve is available in 1/4, 3/8, and 1/2 sizes. The large orifice allows even the largest rust and pipe scale particles to be easily expelled. Standard model includes a 110 volt AC solenoid, 6 ft (2 m) power cord, and grounded plug. An EDV valve can be installed virtually anywhere.

Specifications

Valve

- Function: 2 way, NC, solenoid valve
- Valve Design: pilot operated diaphragm valve
- Port Sizes: 1/4, 3/8
- Orifice: 5/16" (8mm) 1.12 Cv 1/2" (12mm) 2.45 Cv
- Operating Pressure: 20-300 PSIG (1.3-20 bar)
- Solenoid: continuous duty
- Mounting: any position
- Body Material: brass

Timer

- Material: plastic polyamid
- Interval Timer: 1-45 min.
- 'On' Timer: .25-25 sec
- Voltage: 12-230 V AC/DC
- Frequency: 50/60 Hz
- Power Rating: 10 watt
- Enclosure: NEMA 4 / IP65
- Ambient Temp: 130° F (55° C)

Lights

- Left Indicator: power on
- Right Indicator: solenoid engineered

Dimensions

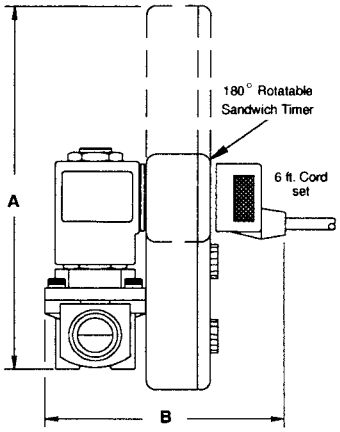

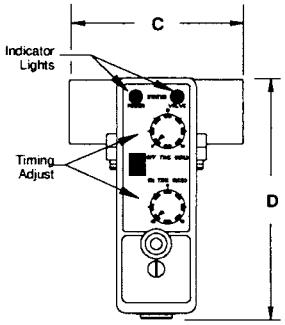

PORT SIZE	A	B	C	D
1/4,3/8	5.75 (146)	3.5 (89)	2.25 (57)	3.75 (95)
1/2	6.0 (152)	3.5 (89)	2.75 (70)	3.75 (95)

dimensions in inches (millimeters in parentheses)

How to Order

EDV - 04 - 110 AC

Model
EDV = Electronic Drain Valve

Threads
- = NPT
B = BSPT

Port Size
02 = 1/4
03 = 3/8
04 = 1/2

Current
AC
DC

Voltage
12
24
110
230

Connector
- = 6 ft. (2 Meter) Power Cord (with grounded plug)
X = Conduit Connector

Information subject to change without notice. For ordering information or regarding your local sales office visit www.numatics.com.

Inline Filters

L Series

L Series in-line filters are designed to protect small air tools such as grinders, impact wrenches, nut runners, screwdrivers or pneumatic components. It will extend component life and reduces downtime by preventing foreign particles from entering the tool. Therefore eliminating expensive tool repair.

Its compact and lightweight anodized aluminum body can be easily installed directly inline before the tool or component.

L Series inline filters can also be used in low-pressure hydraulic applications. They can remove debris or contaminates, hence decrease tool wear and improve system efficiency. The 40-micron filter element insures minimum pressure drop and can be easily replaced or cleaned.

Drawings

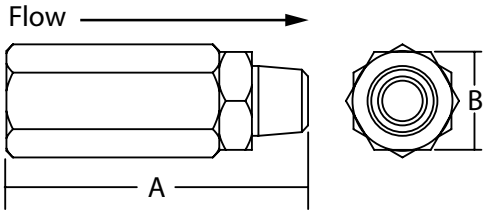

ANSI Symbol

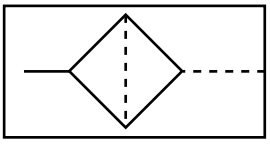

Specifications

Model		L1MN	L2MN	L3MN	L4MN	L5MN
Port Size		1/8”	1/4”	3/8”	1/2”	3/4”
Overall Length (A)		2-3/16”	2-3/16”	2-5/16”	3-13/16”	3-7/8”
HEX (B)		3/4”	3/4”	7/8”	1-1/2”	1-1/2”
Material	Body	Anodized Aluminum				
	Element	Sintered Bronze (40 micron standard)				
MAX Operating Pressure		300 PSI (21.1 ig./cm^2)				
Operating Temperature		35~200˚F (1.6~93.3˚C)				

Flow

Flow is based on 100 psi inlet and the Delta P shown below.

Model		5 PSID	4 PSID	3 PSID	2 PSID	1 PSID
L1MN	Flow SCFM	21	19	18	13	6
L2MN	Flow SCFM	37	24	20	15	10
L3MN	Flow SCFM	33	26	24	19	10
L4MN	Flow SCFM	150	95	80	50	20
L5MN	Flow SCFM	195	188	165	130	25

Element Kits

L1, L2, L3 MN	EKL123
L4, L5 MN	EKL45

Oxygen Concentrator Regulator

Application

The 03 series specialty miniature regulator is designed for applications requiring precision control at a very low cost. Used primarily in OEM applications, the 03 series can be applied in applications using air, nitrogen, oxygen, water, and other inert gases/fluids. Its lightweight all plastic design allows use in many specialty environments. This regulator has been applied successfully in many different markets including:
Oxygen: concentrators, analyzers, anesthesia
Adhesive: Applicators, metering equipment
Paint: spray systems, head control
Water service: filtration, control, aeration
Test equipment: leak test, air gauging, flow test

Features

- Flows accurate to 0.1 psi in low flow applications
- Four spring ranges available as a standard. 0-15 psi, 0-30 psi, 0-60 psi, 0-100psi.
- Relieving or non relieving models.
- Tamper-resistant or adjustable designs available.
- Body Design Features

101 /102 series

- Barb fitting outlet designed for use with 1/4 inch id tubing allows fast assembly.
- Threaded 1/8 supply is male eliminates extra fitting.
- Tamperproof or preset knob.

201 / 202 series

- Barb fitting outlet designed for use with 1/8 inch id tubing allows fast assembly.
- Manifold inlet and outlet ports.
- Quick assembly with fixed height dimension.
- Tamperproof or preset knob.

Specifications

Temperature Range: 40-120F (4-50C)
Max inlet Pressure: 150 PSIG (10bar)
Weight:
SCFM with 100psi inlet set at 75 psi: 70 lpm
SCFM with 100psi inlet set at 60 psi: 50 lpm
SCFM with 100psi inlet set at 40 psi: 30 lpm
SCFM with 100psi inlet set at 10 psi: 10 lpm
Body Material: Delrin

Dimensions in inches (millimeters in parenthesis)

R03N-101

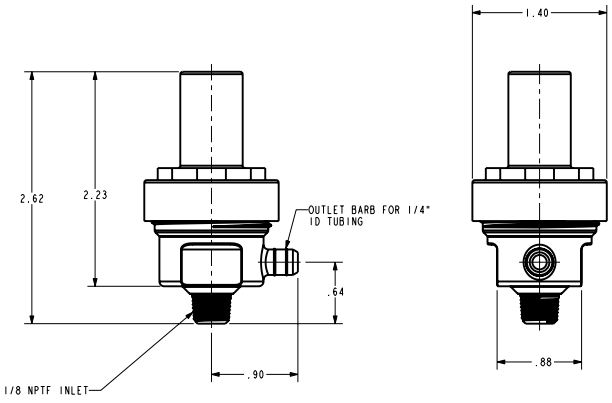

R03N-102

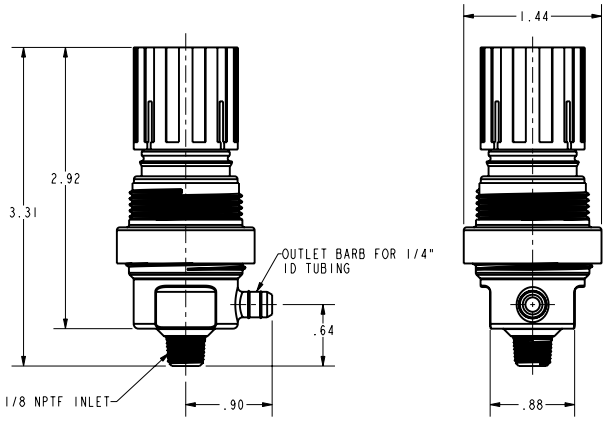

Information subject to change without notice. For ordering information or regarding your local sales office visit www.numatics.com.

Oxygen Concentrator Regulator

Dimensions in inches (millimeters in parenthesis)

R03N-201

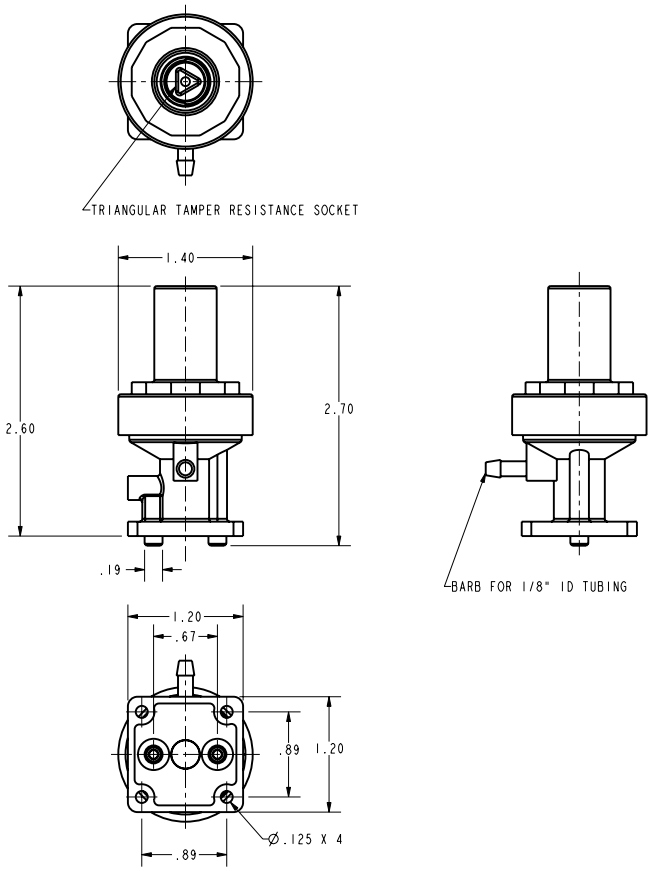

R03N-202

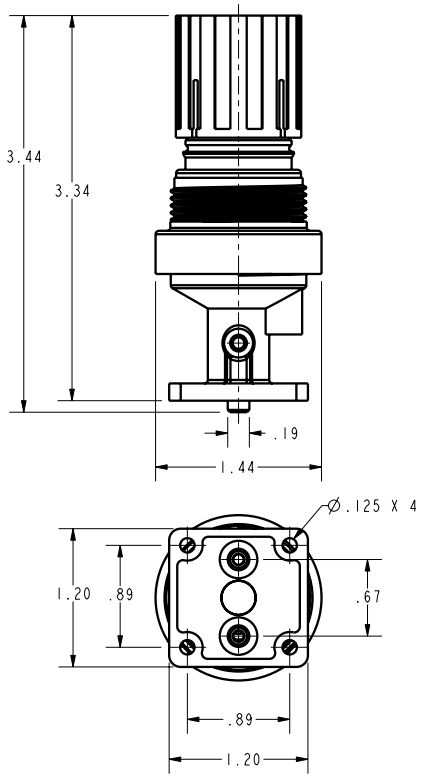

How to Order

R03 N - 101

Series
Oxygen Concentrator Regulator

Style
R = Relieveing
N = Non-Relieveing

Model
101/102 = 1/8 NPT Bottom Connection (barb outlet, see drawings)
201/202 = Manifold Inlet/Outlet (see drawings)

Gauges

GA300 pictured

214-194 pictured

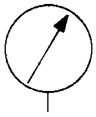

ANSI SYMBOL

Application

Numatics gauges are widely used on compressors, filter/regulators ('piggy-backs'), water pumps, paint sprayers, and a variety of other applications for measuring the pressure of the air passing through the component.

Numatics Liquid Filled pressure gauges provide maximum service life for your pneumatic gauge applications. Each glycerine filled model is designed to prevent harmful environments or severe vibration from causing premature gauge failure.

Features

- Utilizes a Power Flex movement with polyester segment, contributing to longer gauge life.
- ABS (Acrylonitrile, Butadiene, Styrene) casing is ideal for rugged applications and harsh environmental conditions
- Full view polycarbonate window for better dial visibility.

Specifications

All Numatics Gauges
Sizes: 1.5", 2"
Case: Black ABS Composite
Ring: None
Window: Polycarbonate
Dial: Green, Red, and Black on White Background
Pointer: Black Aluminum
Socket: Brass
Liquid Filled Gauges
Liquid Used: Glycerine
Connection: Center Back Mount

Available Models

Numatics Gauges

MODEL	FACE DIAMETER	THREAD SIZE	PRESSURE RANGE (PSIG)	PRESSURE RANGE (BAR)
GB005	2.0"	1/4 NPT	0-5	0-0.5
RB005	2.0"	1/4 BSPT	0-5	0-0.5
GB015	2.0"	1/4 NPT	0-15	0-1.0
RB015	2.0"	1/4 BSPT	0-15	0-1.0
GA030	1.5"	1/8 NPT	0-30	0-2.0
RA030	1.5"	1/8 BSPT	0-30	0-2.0
GA060	1.5"	1/8 NPT	0-60	0-4.0
RA060	1.5"	1/8 BSPT	0-60	0-4.0
GA100	1.5"	1/8 NPT	0-100	0-7.0
RA100	1.5"	1/8 BSPT	0-100	0-7.0
GA160	1.5"	1/8 NPT	0-160	0-11.0
RA160	1.5"	1/8 BSPT	0-160	0-11.0
GA300	1.5"	1/8 NPT	0-300	0-20.0
RA300	1.5"	1/8 BSPT	0-300	0-20.0
GB030	2.0"	1/4 NPT	0-30	0-2.0
RB030	2.0"	1/4 BSPT	0-30	0-2.0
GB060	2.0"	1/4 NPT	0-60	0-4.0
RB060	2.0"	1/4 BSPT	0-60	0-4.0
GB100	2.0"	1/4 NPT	0-100	0-7.0
RB100	2.0"	1/4 BSPT	0-100	0-7.0
GB160	2.0"	1/4 NPT	0-160	0-11.0
RB160	2.0"	1/4 BSPT	0-160	0-11.0
GB300	2.0"	1/4 NPT	0-300	0-20.0
RB300	2.0"	1/4 BSPT	0-300	0-20.0

Numatics 14 Series Manifold Regulator Gauges

MODEL	FACE DIAMETER	THREAD SIZE	PRESSURE RANGE (PSIG)	PRESSURE RANGE (BAR)
GB060A	1.5"	1/4 NPT	0-60	0-4.0
RB060A	1.5"	1/4 BSPT	0-60	0-4.0
GB160A	1.5"	1/4 NPT	0-160	0-11.0
RB160A	1.5"	1/4 BSPT	0-160	0-11.0

Numatics Liquid-Filled Gauges

MODEL	FACE DIAMETER	THREAD SIZE	PRESSURE RANGE (PSIG)	PRESSURE RANGE (BAR)
214-194	1.5"	1/8	0-160	0-11
214-195	2.0"	1/4	0-160	0-11
214-196	1.5"	1/8	0-60	0-4

Information subject to change without notice. For ordering information or regarding your local sales office visit www.numatics.com.

Mounting Brackets

Application

Mounting brackets are used to fix a regulator, piggyback or **FlexiBlok**® assembly to a panel as an alternative to the integral mounting holes located in the 22, 32 and 42 Series **FlexiBlok**® heads. They are also used as an alternative to a hard piped mounting system for the 12, 50, 70 and 72 Series filter product lines.

Panel Mount Nuts

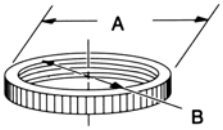

Panel mount nuts thread onto the bonnet of the regulator to secure the unit against the mounting bracket.

MODEL	SERIES	A	B	HOLE DIA.
PN12	12 Series FlexiBlok 72 Series Stainless	1.5 (38)	1-3/16-16	1.25 (32)
PN22	22 Series FlexiBlok	1.5 (38)	1-1/4-16	1.31 (33)
PN32P	32 Series FlexiBlok	2.05 (52)	1-3/4-16	1.77 (45)
PN70S	70 Series Stainless Steel	2.0 (51)	1-3/4-18 UNS-2B	1.75 (44)

Models and Dimensions

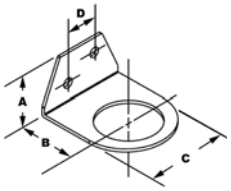

PK12, PK22 Mounting Bracket *for* 12 *and* 22 Series FlexiBlok® Regulator and Piggyback
includes bracket and panel mount nut *(see panel mount nut dimensions below)*

Series	Model #	Dimensions			
		A	B	C	D
12,22	PK12 & PK22	1.05 (27)	1.19 (30)	1.75 (44)	.625 (16)

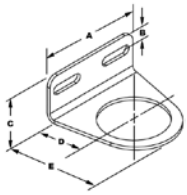

PK32 Mounting Bracket *for* 32 Series FlexiBlok® Regulator and Piggyback
includes bracket and panel mount nut *(see panel mount nut dimensions below)*

Series	Model #	Dimensions				
		A	B	C	D	E
32	PK32	2.75 (70)	.41 (10)	1.19 (30)	1.5 (38)	2.67 (68)

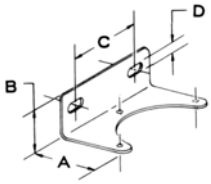

PK50, PK50A, PK50B Mounting Bracket *for* 50 Series High Flow Regulator
includes one bracket

Port Size	Kit #	Dimensions			
		A	B	C	D
1/4 & 3/8	PK50A	2.25 (57)	1.19 (30)	1.88 (48)	.27 (7)
1/2	PK50B	2.25 (57)	1.06 (27)	1.88 (48)	.27 (7)
3/4 - 1 1/2	PK50	2.94 (75)	1.75 (44)	3.25 (83)	.33 (8)

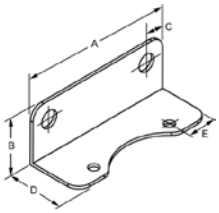

PK89* Mounting Bracket *for* 89 Series Instrument Air Regulator
includes one bracket

Kit #	Dimensions				
	A	B	C	D	E
PK89	3 (76)	1.13 (29)	.375 (10)	1.12 (28)	.625 (16)

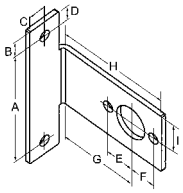

BRK14AB Mounting Bracket *for* 14 Series FlexiBlok® Regulator and Piggyback
includes left and right brackets, 2 left side bolts, and 2 right side nuts *(see dimensions below)*

Kit #	Dimensions								
	A	B	C	D	E	F	G	H	I
BRK14AB	2.78 (71)	.35 (9)	.4 (10)	.35 (9)	.6 (15)	.6 (15)	1.8 (46)	2.62 (67)	.73 (19)

The right bracket mounts using the bolts that are included with the unit the bracket is being mounted to.

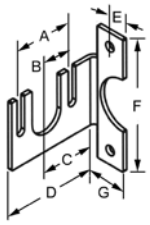

BRK22AB Mounting Bracket *for* 22 Series FlexiBlok®
includes left bracket, right bracket, 2 right side bolts, 2 right side nuts

Kit #	Dimensions						
	A	B	C	D	E	F	G
BRK22AB	1.57 (39)	.785 (20)	1.45 (37)	2.9 (74)	.4 (10)	3.5 (89)	1 (25)

dimensions shown for BRK22A. BRK22B is a mirror of BRK22A
Drawing and/or dimensions subject to change

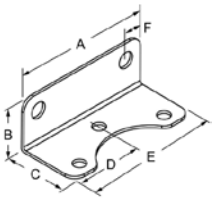

PK88* Mounting Bracket *for* R87 Series Ratio Relay Volume Booster *and* R88 Series High Flow Precision Regulator
includes one bracket

Kit #	Dimensions					
	A	B	C	D	E	F
PK88	3 (76)	1.13 (29)	1.38 (35)	1.5 (38)	3 (76)	.4 (10)

Modular Air Systems

NOTE: Lockout valve must be placed downstream of filtration equipment, which will prevent damage to components from backflow.

Applications

The modular concept offers custom design capabilities for compact air control systems. This design eliminates fittings and potential air leaks, thus reducing cost, space, and installation time.

Features

- Modular adaptable to **FLEXIBLOK**® 32 Series 3/4 port sizes (06)
- Easy installation and service
- High exhaust capacity
- Low friction startup
- Brad Harrison connection (optional)
- Exhaust reclassifier (optional)
- Slow Start Valve (optional)
- Meets OSHA specifications
- Lockable venting supply slide valve
- Common exhaust

To Order

Purchase as individual components from the selections below, or for a complete list of Numatics modular air preparation products, consult your local representative.

32 Series Modular Air Systems How to Order

Shut Off Valve | **Air Prep Selection** | **Modular Lockout** | **Adapter** | **Valve Sub-Base** | **Valve**

Model Number
VS32-06 = inlet port

Valve Series
- 125 Series
- 250 Series
- ISO 2
- MARK 55

(see Numatics catalog for complete list of valve product lines)

Description	Examples
filter/regulator/lubricator	M32-06XFRLX
filter-regulator	P32B-06
coalescer/regulator	C32D-06
filter-regulator/lubricator	M32-06XPLXX

(see "FlexiBlok® FRL Series" section for complete product listing)

Description	Model no.
125 Series dual exhaust	103-762
250 Series common exhaust	103-765
ISO 2 dual exhaust	203-880
MARK 55 common exhaust	
with plugin	203-877
without plugin	203-876

Description	Model No.
standard modular lockout	MVL32-06Y
Slo-Start™ modular lockout	MVT32-06Y

Description	Kit No.
125 Series adapter	219-316
250 Series	*not required*
ISO 2 common exhaust adapter	219-317
MARK 55 adapter	219-315

Information subject to change without notice. For ordering information or regarding your local sales office visit www.numatics.com.

Notes

numatics

World Class Supplier of Pneumatic Components

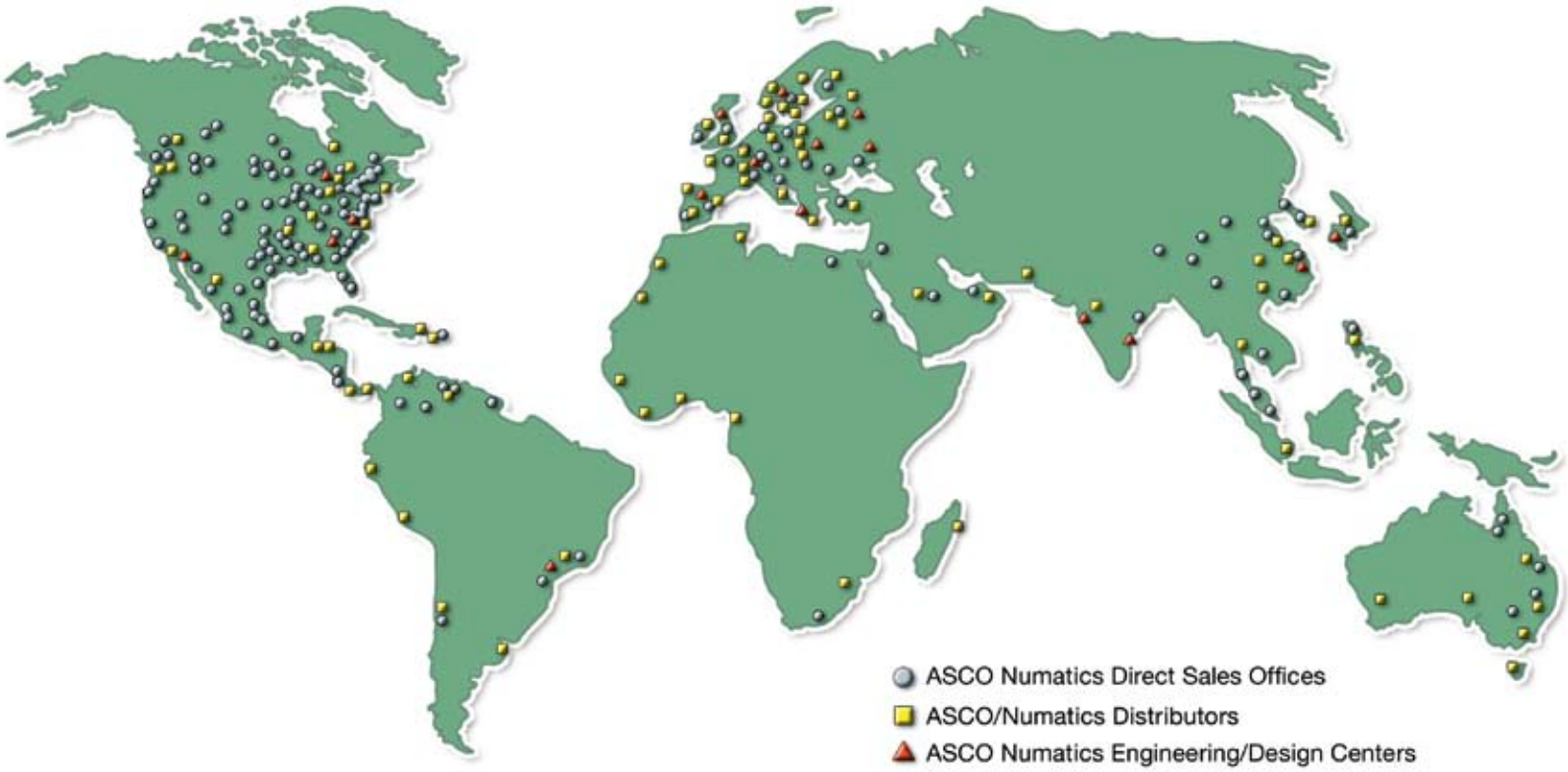

WORLD HEADQUARTERS

USA
Numatics, Incorporated

46280 Dylan Drive
Novi, Michigan 48377

P: 1-888-Numatics
1-888-686-2842

Canada
Numatics, Ltd

P: 519-452-1777

Mexico
Numatics de Mexico S.A. de C.V.

P: 52-222-284-6176

For a comprehensive listing of all Numatics production and distribution facilities worldwide, visit:

www.numatics.com

LT-FRL_ACCESS Rev 07/10
© Numatics Inc. 2009 - 2010